| 序号 No | | 图例 legend |
|---|---|---|
| 2 | —— | 无需保温管系 NON HEATED PIPE(STPG) |
| 1 | | 球阀 GLOBE VALVE |

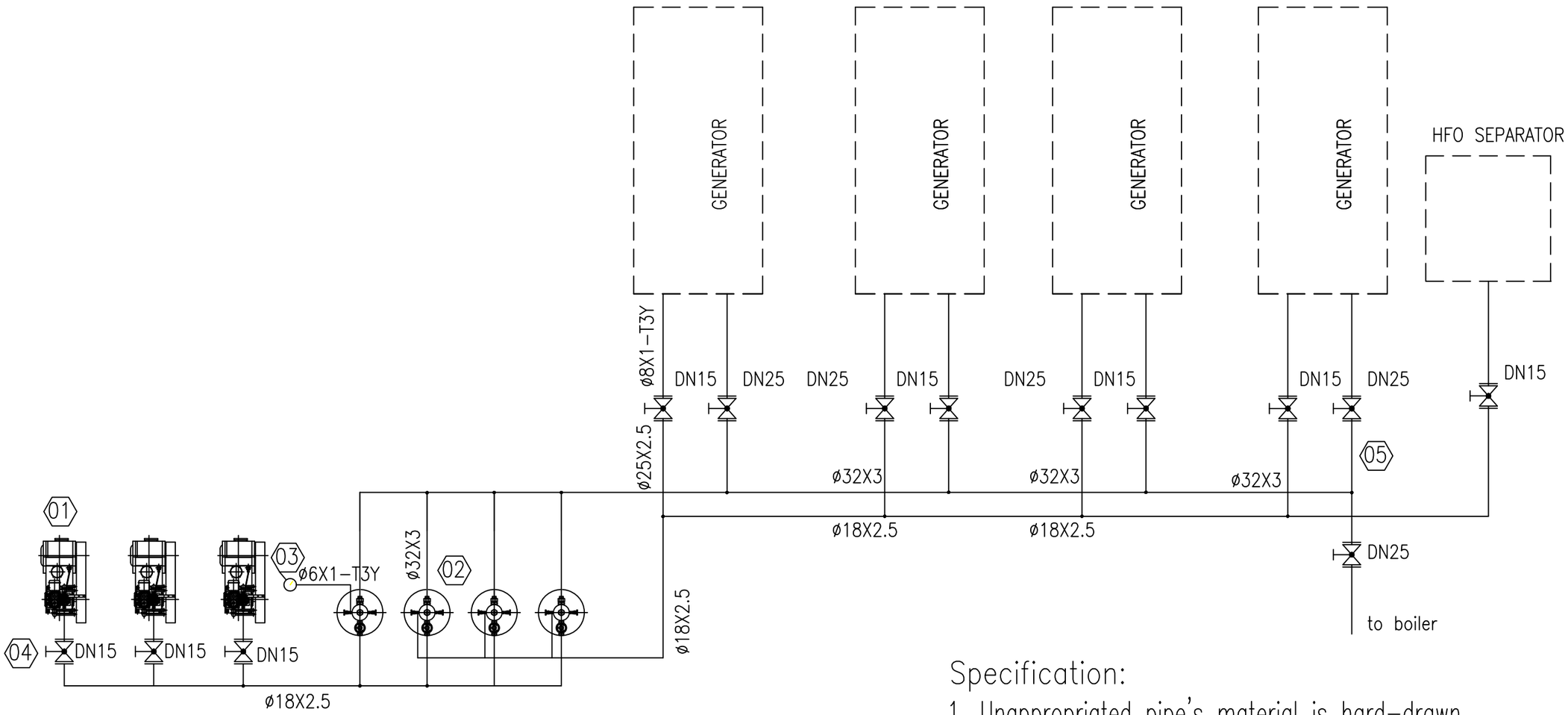


Specification:

1. Unappropriated pipe's material is hard-drawn seamless steel pipe or T3Y.
2. Air compressor: 3.0MPa.

| 符号 No | 名称 Name | 型号规格 Model and specification | 单位 Unit | 数量 Q'ty | 备注 Remarks |
|---|---|---|---|---|---|
| 5 | 高压球阀 BALL VALVE | DN15 PN4.0 | PCS | 8 | |
| 4 | 高压球阀 BALL VALVE | DN25 PN4.0 | PCS | 5 | |
| 3 | 压力表 EXHAUST PIPING EXPANSION JOINT | 0-6MPa | PCS | 1 | |
| 2 | 空气瓶 AIR BOTTLE | B500 | PCS | 4 | |
| 1 | 空气压缩机组 AIR COMPRESSER | | PCS | 3 | |

| SIGN | Q'ty | SUBAREA | CHANGE | UNDERSIGN | DATE |
|---|---|---|---|---|---|
| DESIGNER | | TECHNOLOGY | | | |
| CHK'D | | NORMALIZATION | | | |
| APPR | | | | | |
| APPR | | DATE | | | |

| DRAWING SIGN | VERSION NO. | WEIGHT | SCALE |
|---|---|---|---|
| S | 01/2009 | | |
| TOTAL PAGE | THE PAGE | | |

Leda Greenpower and China national Electric Cable & Wire Imp./Exp. Inc.

压缩空气系统原理图
Compressed AIR SYSTEM

CAD更改号

借(通)用件登记

旧底图总号

底图总号

签字

日期